| PART NO. | EXTRUSION | MATING COMPONENT | DESCRIPTION | SHEET |
|---|---|---|---|---|
| E.432.001.STR | E.12088<br>E.12089 | E.7398 | 4⅜" FRAME HEAD/JAMB CLOSURE (4 13/16" DEPTH) | 1 OF 1 |

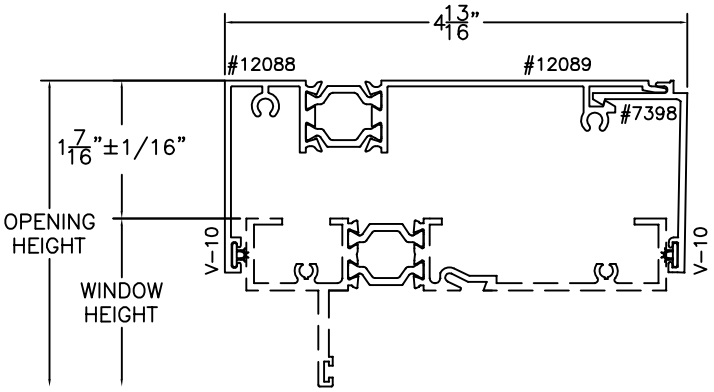



ALL SEASONS
ARCHITECTURAL WINDOWS MFG.
1293 N. Harvey Mitchell Pkwy.
Phone: (979) 823-6557
Fax: (979) 823-1005


| | | | | | | |
|---|---|---|---|---|---|---|
| IMPACT: NO | COMPATIBLE SERIES: | FAMILY: E8000 | SCALE: 1:2 | REVISION: B | SHEET NUMBER |
| BLAST: NO | E8065FF | DESCRIPTION: E8000 FAMILY SURROUNDS HEAD AND JAMB CLOSURES | | | 1 OF 1 |
| TDI NO: | E8065SGD | | | | |
| FLORIDA NO: | | | | | |
| | | THIS DRAWING CONTAINS CONFIDENTIAL INFORMATION WHICH IS THE PROPERTY OF ALL SEASONS. RECEIPT OR POSSESSION OF REPRODUCTIONS OF THIS DRAWING OR POSSESSION OF REPRODUCTIONS OF THIS DRAWING DOES NOT CONFER ANY RIGHTS OR LICENSE TO USE INFORMATION CONTAINED HEREIN WITHOUT THE WRITTEN CONSENT OF ALL SEASONS. | | | |
| | | DRAWN BY: K.Kernell | DATE DRAWN: 07/28/14 | SHEET SIZE: A | |